Fransgård

Manual
US

Farm tractor winch V-3004

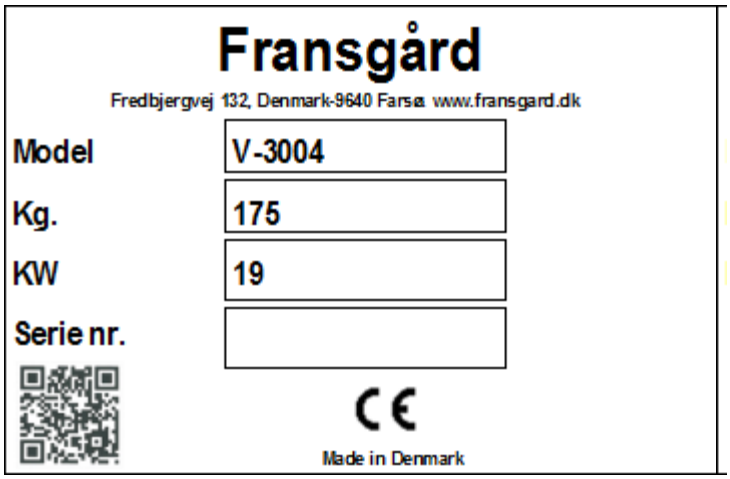

Fransgård Maskinfabrik A/S
Fredbjergvej 132
DK - 9640 Farsø
Telefon : +45 98 63 21 22
Fax : +45 98 63 18 65
www.fransgard.dk
mail@fransgard.dk

LIST OF CONTENTS **Page**

Technical specifications 1
Safety instructions 2
Fitting 2
Lubrication and maintenance 2
Instructions for use 2
Danger / warning 3
Adjusting the clutch 4
Instructions for mounting the wire 5
Safety manual 6-15
Spare part list 16-

Technical data V-3004

TECHNICAL SPECIFICATIONS

Pulling power ..... 3000 kg/6600 lbs.
Clutch ..... 315 cm².
Transmission ..... 5/8" roller chain.
Wire ..... 8 mm-5/16”.
Wire speed ..... 0,6 - 1,5 m/s / 2 – 5 ft..
PTO.shaft ..... 540 r./min.
Weight ..... 175 kg/385 lbs.

SAFETY INSTRUCTIONS

The machines may only be used by qualified operators.
Before starting working, check that the tractor and the machines are standing on a fixed horizontal base. The owner and the user are responsible for the fact that no unauthorized persons are in the working area. The timber winch must be lowered to the ground when the winch is in operation.
The steel wire should be inspected daily, and if it is frayed it should be replaced.
Please note that steel wires, slides, end hooks, etc. that are used in connection with skidding timber are wearing parts and are therefore not covered by the guarantee.
The protective supplied must be fitted before you start the machine.
The connection pins at pos.3 page 12, must be inspected for wear at regular intervals and at least twice a year. If necessary they must be replaced, since the actuating lever may stick with worn pins.

FITTING

The forestry winch is mounted in the 3-point linkage of the tractor.
Adjust length of top-link to prevent the machine from hitting the drivers cabin.
Check length of PTO. shaft both in working and transport position, shorten if necessary.
Fit the wire by leading it over the uppermost roller onto drum.
Fix onto drum by means of the lock no. 31 page 12.
Roll out the cable completely and stretch it while winding it onto the drum.
Screens removed for servicing the machine must be reinstalled before the machine in used again.

LUBRICATION AND MAINTENENCE

Lubricate the PTO. shaft once daily.
Lubricate the chain once every week.
No oil on clutch lining (15509).
The turning plate at the top pulley has to be greased once every day.

INSTRUCTIONS FOR USE

Make sure that:
- the cable is properly fixed
- the cable is not damaged
- the PTO. shaft is properly mounted and adapted in such a way that the angle of the PTO. shaft is as small as possible.
- the clutch in properly adjusted so in the fact that the wire drum does not revolve until the clutch line is activated.

Winching:
Lower the winch so in the fact that it stands on the butt plate, fit forestry chain onto the log, and fit the forestry chain either onto the hook or onto the slide on the cable, position yourself in a place you have good view, pull clutch line slowly. Do not transport logs directly in the cable, always use forestry chains.

Transport:
Place the logs on the chain beam of the forestry winch. Lift the winch.

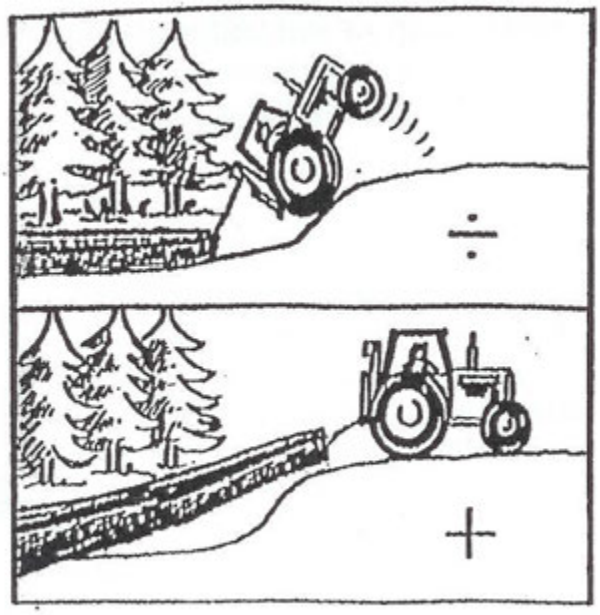

DANGER!
Read before operation this machine!

It is the owner's responsibility to instruct all equipment operators and support personal in the operation of winch.

WARNING!

1) Do not attempt to operate this winch without proper training.
2) Do not operate this machine until the owner's manual has been completely read and understood.
   New owner's manual are available from your Dealer or the factory phone + 45 98 63 21 22
   (North America: 514 654 6126). If the warning decals become illegible, new decals can also be ordered.
3) Keep hands, feet and clothing away from power driven parts!
4) Ensure that the cable is in good conditions before operating the winch. If the cable breaks, parts of it can fly both toward and away from the winch.
   Ensure that all bystanders are out of reach of the cable when the winch is used.
5) Never handle cable without shutting of power-take off!
6) Do not transport logs direct in the cable - use the log towing bar.
7) This machine has been constructed to skid and push together timber that has been felled and is lying on the ground and may not be used for other purposes. The machine must not be used to pull vertical trees or trees that are wedged or jammed, as this is extremely dangerous.
8) Check moving parts. They should be fastened in place, in good working condition and all shields and guards must be in place.
9) Familiarize yourself with the controls and how to stop the winch and tractor in an emergency.
10) Do not let children or incapable persons operate the winch.
11) Do not wear loose clothing, loose sleeves, neckties or long uncovered hair around moving parts of machinery.
12) Park the winch and tractor on level ground for winching.
13) Operate the winch from a control rope at least 6 m. to the side of the machine.
    Do not operate the winch from the tractor seat.
14) Ensure that other people do not become endangered when you are using the winch.
15) Do not leave the tractor running unattended.
16) Disengage the PTO an turn the tractor off before you service the winch. Remove the keys so the tractor cannot be started up accidentally.
17) Use only original Fransgård replacements parts, do not make any modifications.
18) Inform everyone who works with the winch about risks and how they can avoid accidents.
19) Stay alert! Do not operate when fatigued.
20) Do not winch at sideways angles exceeding 30° (see drawing).

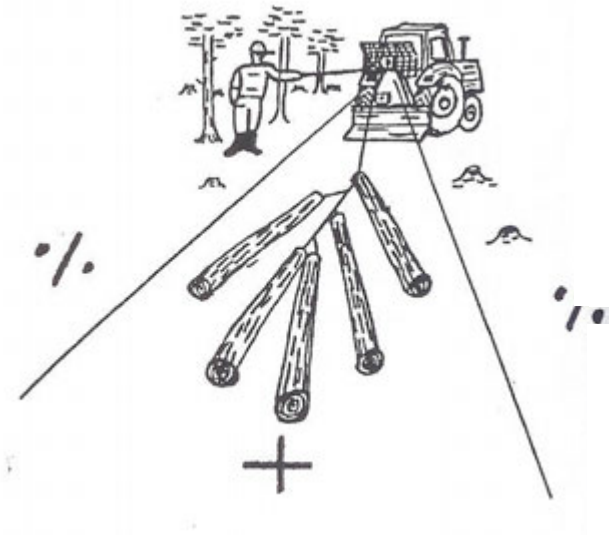

21) Failure to heed the warnings printed on the winch or in the owner's manual might result serious injury or death.
22) The tractor should not be set in motion without the "buttends" of the logs (that have been winched) being raised off the ground. If this is not done and an obstacle hits the butt end of the log (s), then the tractor may turn over and severe injuries may result.

ADJUSTING THE CLUTCH

The clutch is adjusted at the factory.
If it is necessary to adjust it do so as follows:

1. Loosen lock nut no. 34 and bolt no. 1.

2. Hold lever no. 29 against stop, tighten both bolts no. 1 until slight resistance is felt.

3. Release lever no. 29, turn both bolts no. 1 3/4 turn and tighten lock nut no. 34.

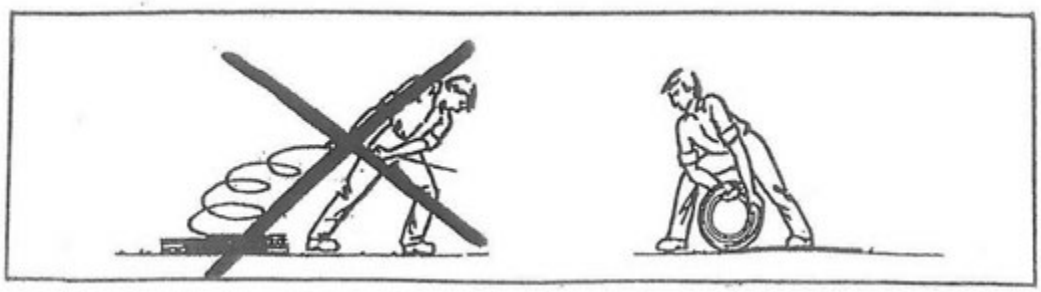

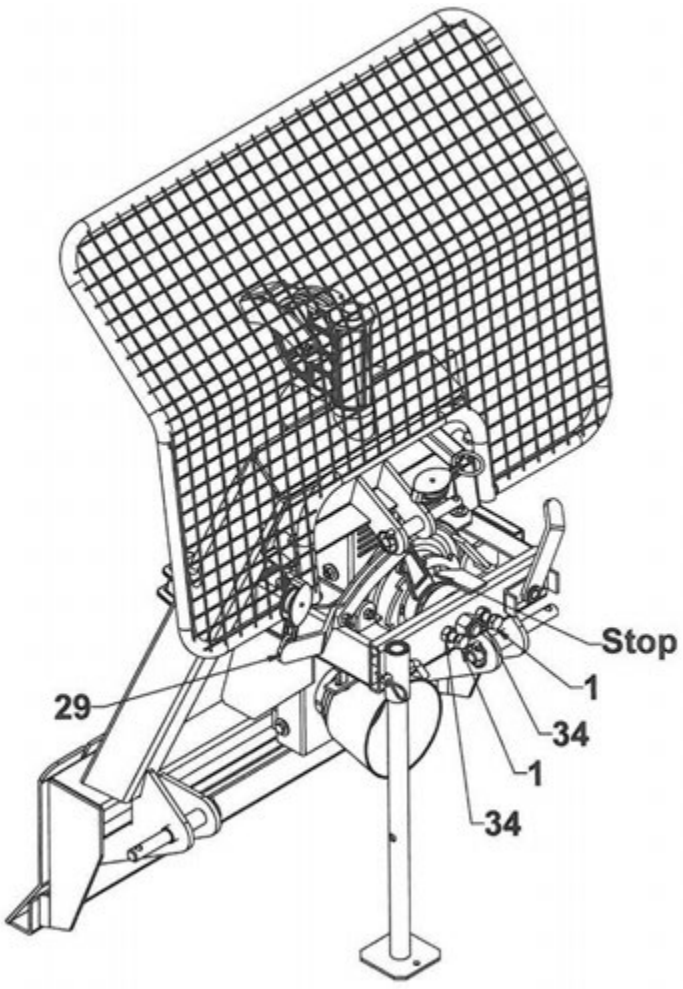

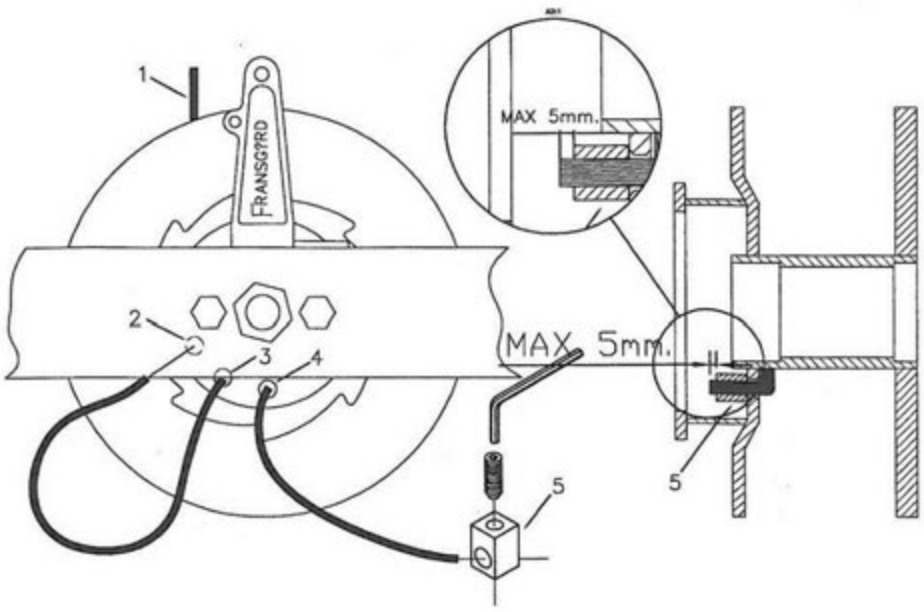

Instructions for mounting the wire.

1.) Pull about 1 metre of the wire **1** out through hole **2** and back through hole **3** and out through hole **4**.

2.) Mount the wire fixing block **5**
(making sure that only 5 mm of the wire are introduced into the fixing block) and fasten with the allen screw and the unbraco wrench supplied.

3.) Then pull the wire back so in fact that the wire fixing block is inside of the toothed rim and close to hole **4**.

Fransgård

Safety, Maintenance and Operation Tips for North American winch Models:

V3004 – V3507 - V4000 – V-5000 and V6500

NOTICE: THIS SECTION MUST BE READ PRIOR TO USING THIS MACHINE

The owner's operator and repair manual, included with the machine, must also be read prior to using this machine

Failure to heed the warnings printed on the winch or in the owner's manual might result serious PHYSICAL injury.

SAFETY INSTRUCTIONS

The machines may only be used by qualified operators.
Prior to operating this winch, make sure that the tractor and the winch are on a stable, level surface, to avoid tipping over, when the unit is under load. The user is responsible for assuring that no unauthorized persons are in the working area. The timber winch must be lowered to the ground when the winch is in operation.
The steel wire cable should be inspected daily, and if it is frayed it should be replaced immediately.
The protective screen,supplied with the unit, must be installed before you start operating the winch.
The pressure pins (p/n 15503) at pos.3 on page 14, must be inspected for wear at regular intervals or at least twice a year. If necessary they must be replaced, since the clutch lever may stick with worn pins.

INITIAL INSTALLATION

Mounting to the tractor's linkage system:

The forestry winch is to be mounted on the 3-point linkage of the tractor.
Adjust length of top-link to prevent the protection screen from hitting the tractor's cabin.
Verify the length of the P.T.O. shaft both in working and transport position, shorten if necessary.Inspect the P.T.O. regularly to make sure all the guards are in good condition and replace if necessary.

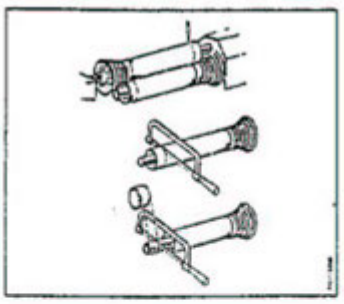

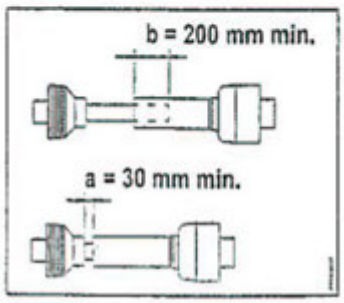

The P.T.O must be cut to a proper length, so it does not "bottom out" and bind. Remove the PTO to perform this operation. If the PTO is not cut to the proper length, it may cause damage to the PTO, gearboxes etc. See illustration for proper measurements.
a = clearance when attached to tractor; should be 30mm /1.20 inches
b = overlap; should be 200mm / 7.87 inches

Mount the PTO to the tractors PTO output shaft. Connect the safety chain so it will not turn and get caught to any clothing.

REMEMBER! Inspect the PTO safety shield for any damages, before and when operating the machine. Change the safety shield if necessary.

Adjusting the Lift Arms and top links: The lift arms should be attached to the lower lift arms when the winch is set on level ground. Then proceed to attach the top link. The top link must be adjusted in such a way so the winch may sit vertical when it is set to the ground.
Also, make sure that the protection screen does not hit the tractor cab, when the winch is lifted with the 3-point hitch. If this is the case, adjust the top link accordingly.

Installing and/or replacing the wire cable (if the winch is initially delivered without the cable installed)

During the initial cable installation or when replacing a worn wire cable, unroll the cable completely, making sure there are no twists in it. (see diagram A)
Then proceed to install the wire cable on the cable drum by leading it over the top pulley and down though the tube located under the pulley to the cable drum. (fig. 1 in drawing 1) There are three holes in the side wall of the cable drum, run the wire cable out through hole no 2, back in through hole no. 3 and out through hole no. 4 (fig. 2, 3 and 4 in drawing)
Lock the cable to the wire drum by means of the locking lug (which is in the plastic bag where the owner's manual was stored; there is also an Allen Key and set crew in the same bag). Pass the cable through lug, with a maximum of 3/16" (5mm) of cable exceeding the length of the lug, and tighten the set screw securely with the Allen Key that is supplied with the lock lug. Then pull the remainder of the cable into the cable drum.
Do not leave any excessive cable hanging out from the lock lug since it may get snagged when the winch is operated.

Next, attach the hook end of the wire cable with a choker chain to a fixed object (tree, another implement, etc.).Then with the PTO operating at 500 rpm engage the winch with the Green pull cord and pull the tractor towards the fixed object. This will enable the cable to be wrapped evenly and tightly on the cable drum.
This is critical in ensuring the wearing life of the cable, and smooth operation of the winch. This procedure should be repeated occasionally, also when you note that the wire cable is loosely wrapped on the cable drum or it is difficult to pull the cable out, when logs are to be tied.

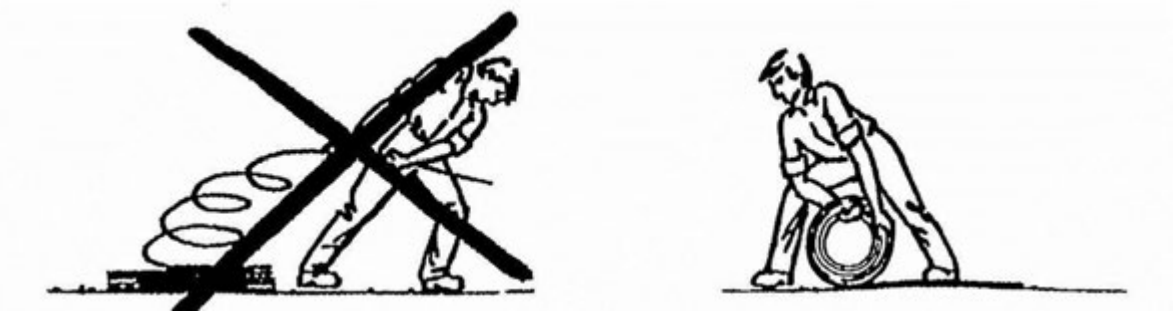

Drawing "A" Unrolling New cable

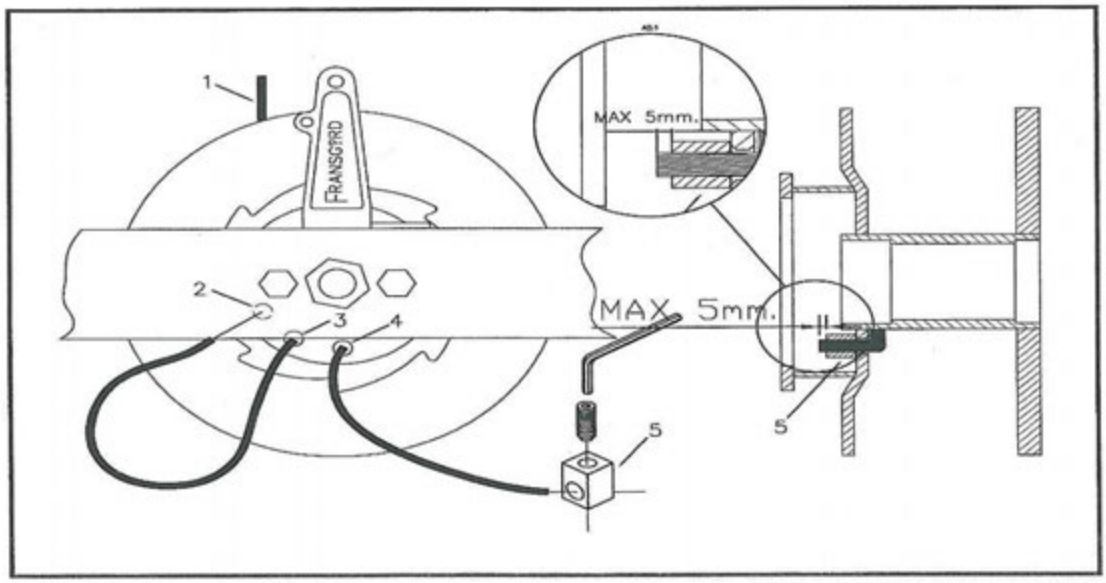

Drawing "B" Attaching cable to wire drum

Fransgard uses a specially designed cable that resists abrasion from being dragged on the ground. Therefore it is highly recommended that an original Fransgard wire cable be used as a replacement for a LONGER WEARING LIFE AND BETTER VALUE FROM YOUR PURCHASE.

Installing the Chokers/Sliders: After installing the cable, release 4 – 5 ft. of cable, by unlocking the cable drum locking latch which is running on the cable drum sprocket. Remove the bolt joining the two pieces of the choker/slider. Place the rounded part on the cable, then slip the flat slotted part in between the rounded part and tighten with the bolt and Nylon lock nut. These must be tightened securely to prevent the choker/slider from slipping over the crimped sleeve attaching the end-hook to the cable. Slip the choker/slider down to the hook to make sure it doesn't slide over the crimped sleeve. If it does then tighten the bolt even more. FAILURE TO DO SO MAY DAMAGE THE CABLE DURING THE WINCHING OPERATION (Cables are considered a wearing part and are not covered under the warranty agreement. Note: If your winch was delivered with the cable and choker/sliders installed, make sure the choker/slider bolt has been tightened securely as described below in **Fig. A**

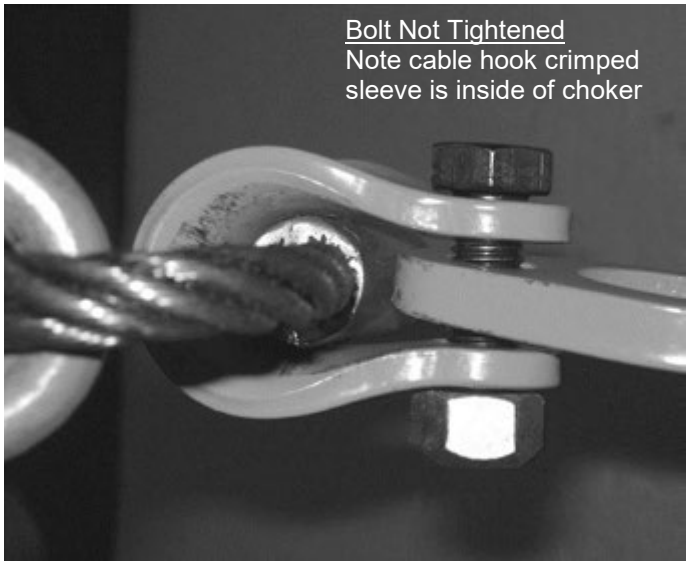

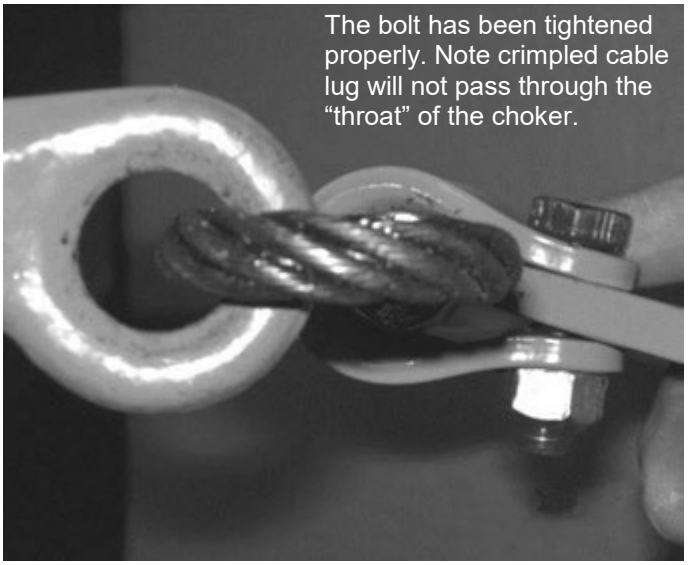

Fig. A

Protection Screen
Screens removed for servicing the machine, must be reinstalled prior to using to using the winch again.
The machine should never be operated with the protective screen removed.

Make sure your three-point hitch is properly adjusted so when the winch is put in a raised position with the three-point hitch, the protection screen does not hit the tractor cabin.

INSTRUCTIONS FOR USE

Prior to operating the winch, make sure that:

- the cable is properly installed, and the cable is wound tight on the cable drum
- the cable is not damaged, with broken strands that might cause the cable to break when it is pulling a load.
- the P.T.O. shaft is properly mounted and adapted in such a way that the angle of the P.T.O. is as straight as possible to prevent breakage and additional wear to the joints.
- the clutch is properly adjusted as to ensure the cable drum does not turn until the Green power cord is pulled.

Winching:
Lower the winch so that it rests on the butt plate. Activate the tractor PTO set it to run at approx. 500 rpm.
Unlock the cable drum, by pulling the cable drum latch.
Pull out the desired length of cable towards the logs that are to be pulled.
Tie the forestry chain around the log, and lock the forestry chain either on to the hook or in the slot of the slider/choker, which has been previously installed properly on the cable(as per Fig. A , above),
Never wind the cable directly around the log that you wish to pull, since this will permanently damage the cable. You must only use the choker chains, for this purpose.
Return to the tractor, Flip the cable drum locking latch so it will ride on the cable drum sprocket, and prevent the load from slipping, if the engine on the tractor was to stall. Then position yourself at a distance from the winch and where you have good view of the logs being pulled and are away from any flying stones or debris that could be projected as the logs are being pulled in.

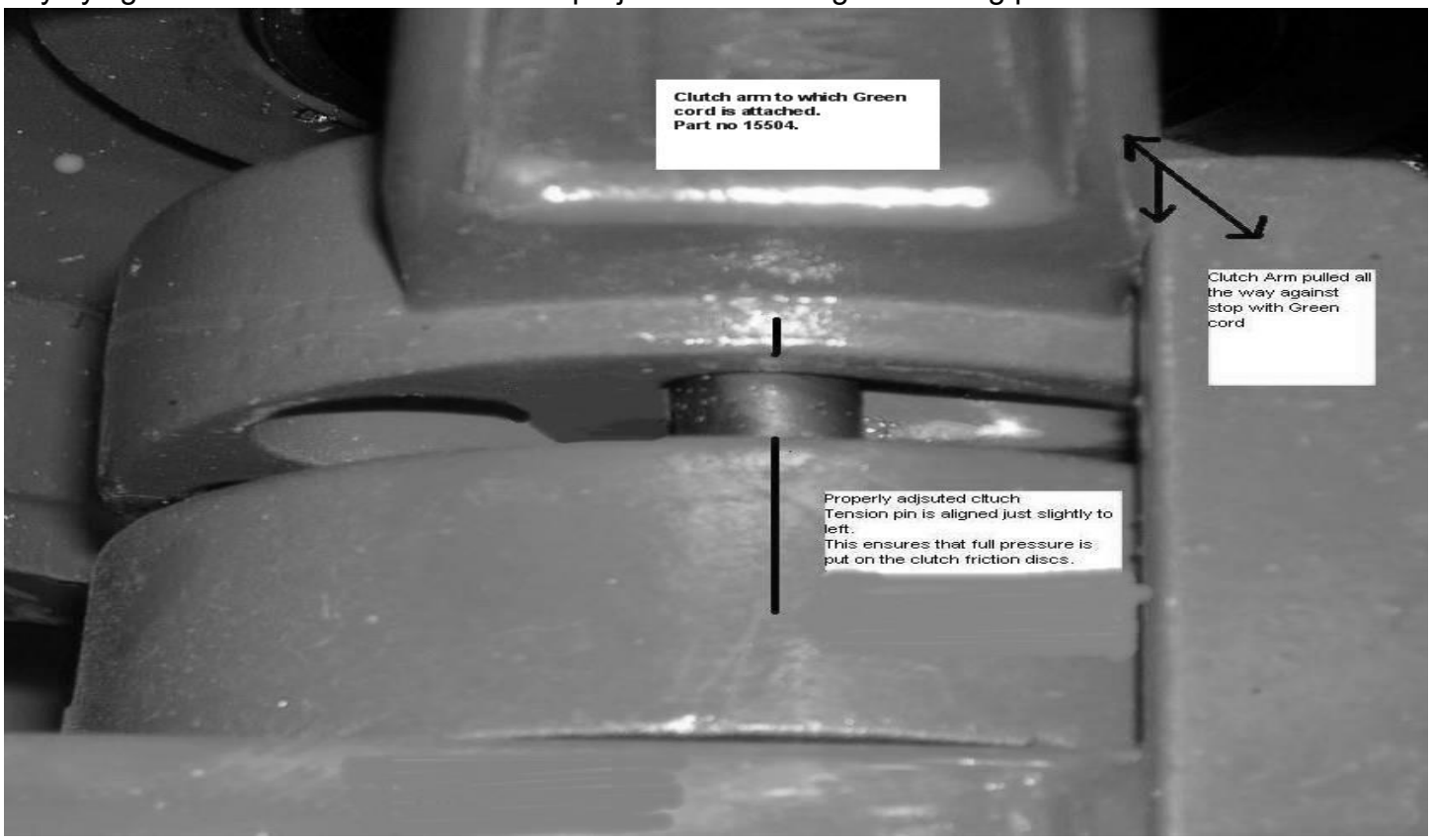

Fig. C

Pull the Green power cord slowly to engage the clutch and begin the pulling process. Make sure that you pull this cord so that the clutch arm lever comes to rest against its stop (as indicated by the arrows to the right in **fig. C**).
If an obstacle is hit, the clutch will slip, when this occurs, release the Green power cord, all winching action will cease, enabling you to go and remove the obstacle and then resume operation.
When the logs have been brought up to the winch, remove the chains from the cable and/or end hook.
Attach them to the tow bar. When attaching logs to the tow bar on the skid plate, keep enough slack on the chains so the logs will not bind against the skid plate when making turns (this will bend the tow bar), also make sure the butt ends of the logs are lifted off the ground when the winch is raised with the three-point lift of the tractor, to avoid tipping over, with the tractor, if an obstacle is hit
Do not haul logs directly with the cable, always attach the forestry chains to the tow bar, this will lower the center of gravity of the tractor and prevent tipping over with the tractor.
Furthermore this will prevent damaging the cable, top pulley, and main shaft of the cable drum, since the clutch will not release when the cable drum locking latch is engaged.

Transport:
Lift the winch with the 3-point linkage and proceed with caution.
Avoid sharp turns, to avoid tipping the tractor and/or prevent breaking the forestry chains when the logs bundle-up against the skid plate.

LOGS MUST ALWAYS BE ATTACHED TO THE TOW BAR WITH THE FORESTRY CHAINS WHILE IN TRANSPORT POSITION. THIS WILL LOWER THE CENTER OF GRAVITY OF THE TRACTOR AND PREVENT THE TRACTOR FROM TIPPING OVER, IF AN OBTACLE IS HIT, AND PREVENT SEVERE DAMAGE TO THE WINCH!

LUBRICATION AND MAINTENANCE

- Lubricate the PTO shaft once daily.
- Lubricate the drive chain once every week with a **small amount** of grease only. **NEVER USE OIL**, these liquid lubricants may seep down and get on the clutch lining, which is located directly below the drive chain. No oil should ever be used, since it might penetrate the clutch lining (15509) surface, and would cause the clutch to slip.
- Clean off the dirt and grease the TOP Pulley support table, once every day, to enable the pulley to pivot freely. This will prolong the life of the wire cable and the pulley. Use grease only.
- Use only original Fransgård replacements parts, do not make any modifications. The drive chain is a metric chain, which is hardened to avoid stretching under load, other drive chains will stretch and wear out the main drive gear. The outside wraps of the cable are made of special hardened steel (Warrington seal). This cable is designed specifically for this application since most cables are not designed to be dragged on the ground, stones etc. These are just a few of the several reasons why you should demand and only use Fransgard genuine replacement parts when servicing your product.
- Lubricate the cable using a very small amount of grease on a rag and wipe the cable, when it is fully extended. **AVOID USING OIL SINCE IT WILL IMPREGNATE THE CLUTCH SURFACE OF THE CABLE DRUM AND CAUSE THE CLUTCH TO SLIP**.

Clutch Adjustment:

- The friction clutch system is adjusted at the factory prior to shipment.
- Under normal conditions it should perform without any adjustment for well over 1000 working hours.
- If it is noted that the clutch is slipping with minimal loads, even though the green power cord is fully pulled, so the clutch arm rests against the stop, then a clutch adjustment may be necessary.

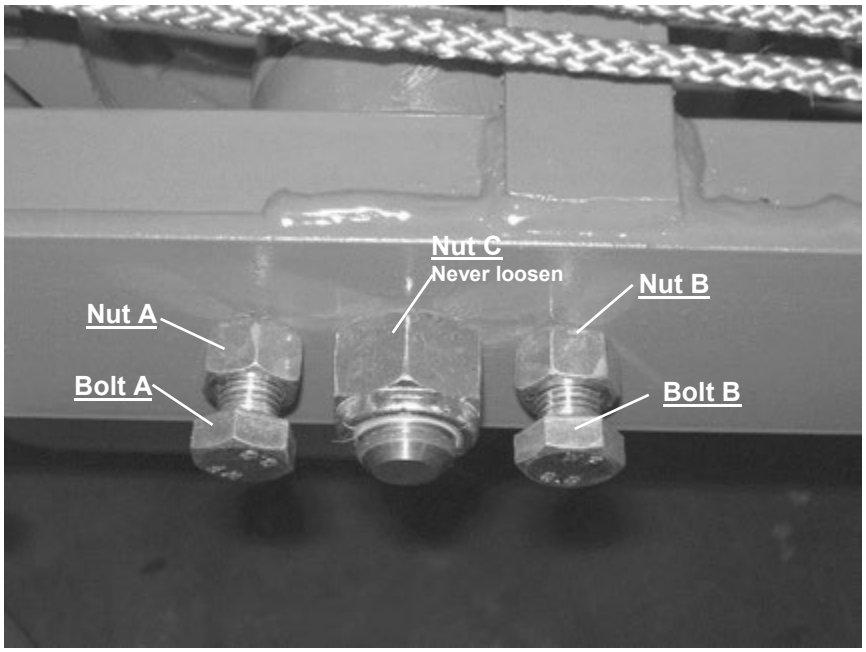

Fig. B

Procedure for adjusting the clutch

IMPORTANT: REMOVE THE PTO FROM THE WINCH

1. Loosen Nut ”A” and Nut ”B” as show in Fig. B above, Never loosen Nut ”C” unless your dismantling the main cable drum shaft. (This is to be done by an authorized dealer only)
2. Pull the Green Pull Cord until the clutch cam lever (p/no 15504) rests against the stop and hold the pressure on the clutch
3. Tighten bolts ”A” &”B” until a resistance is met. Then release the Green pull Cord.
4. Tighten bolts ”A” & ”B” an additional ¾” turn each
5. Tighten nuts ”A” &”B”. Install and engage the PTO shaft, and the winch is now ready to operate

DO'S AND DONT'S FOR SAFETY AND LONGER MACHINE WEAR

DANGER! WARNING!

DO:

Read the original manual before operation this machine!
It is the owner's responsibility to instruct all equipment operators and support personnel in the operation of winch.

FOR OPERATING WINCH:

1) Keep hands, feet and clothing away from power driven parts!

2) Ensure that the cable is in good conditions before operating the winch. If the cable breaks, parts of it can fly both toward and away from the winch.
Ensure that all bystanders are out of reach of the cable when the winch is used.

3) Never perform maintenance on the cable without shutting off the power-take off!

4) Check moving parts. They should be fastened in place, in good working condition and all shields and guards must be in place.

5) Familiarize yourself with the controls and how to stop the winch and tractor in an emergency.

6) Park the winch and tractor on level ground for winching.

7) Operate the winch from a control rope at least 12 feet to the side of the machine.

8) Ensure that other people do not become endangered when you are using the winch.

9) Disengage the PTO an turn the tractor off before you service the winch. Remove the keys so the tractor cannot be started up accidentally.

10) Inform everyone who works with the winch about risks and how they can avoid accidents.

11) Stay alert! Do not operate when fatigued.

12) The tractor should never be set in motion without the "butt-ends" of the logs (that have been winched) being raised off the ground. If this is not done and an obstacle hits the butt end of the log (s), then the tractor may turn over and severe injuries may result.

13) Only use forestry chains, to tie the logs, never directly attach a cable around a log, since this put a "kink" in the cable, and reduce its breaking load permanently.

14) **Never use wire rope slings**, since they cannot be locked into the tow bar while in transport, which lowers the center of gravity and prevents tipping over, when going uphill or uneven ground.

15) Always pull the Green power cord sufficiently to ensure that the clutch engagement lever rests against the stop. This ensures that full pressure will be exterted on the clutch, and full power will be exerted in hauling in the logs. Otherwise, you could "glaze" the or burn the clutch lining

DO NOT:

1) Do not attempt to operate this winch without proper training and knowledge of the working features of this winch

2) Do not operate this machine until the owner's manual has been completely read and understood. New owner's manual are available from your Dealer or the factory phone + 45 98 63 21 22 (North America: 450 654 6126). If the warning decals become illegible, new decals can also be ordered.

3) Do not transport logs direct in the cable - use the log towing bar. **This can cause severe damage to the winch!**

4) Do not use the winch for other uses than winching and skidding trees.

5) Do not let children or incapable persons operate the winch.

6) Do not wear loose clothing, loose sleeves, neckties or long uncovered hair around moving parts of machinery.

7) Do not operate the winch from the tractor seat. Operator could be hit by flying objects during the winching operation since the protection screen does not protect the operator when the winch is lowered to the ground for operation. **Note**: The tractor operator is protected when the winch is raised with the three-point linkage in transport mode.

8) Do not leave the tractor running unattended.

9) Do not winch at a side angle exceeding 30°, the tractor may tip over causing physical injury. Also use the bottom pulley (optional on model V3004/V-3507) when pulling logs that are located lower than the winch surface. This will lower the center of gravity of the tractor, and avoid tipping over.

10) Oil or similar liquid lubricants should never be used on this winch. **(SEE SECTION ON LUBRIFICATION & MAINTENANCE)**

Failure to heed the warnings printed on the winch or in the owner's manual might result serious PHYSICAL injury, and severe damage to the machine.

This product was designed to provide a safe and efficient means of performing your forestry tasks. Operating and servicing this product properly will provide you with many years of satisfying results.

Fransgård

Delivery Check List

Winch Model: _____ Serial No.: _____

Dealer Check List on delivery of winch

1) PTO cut and installed on tractor with proper overlap of Safety guard and shafts to prevent the Shaft from "binding" or " bottoming-out" when the winch is raised with the three-point hitch [ ]

2) The three-point hitch is to be adjusted properly so that the Protection screen does not hit the tractor cabin when the winch is raised [ ]

3) Operating and Safety Instructions reviewed with Purchaser [ ]

4) Purchaser advised that the choker chains be removed from the cable when the logs have been pulled in and how to attach the chains properly to the tow bar before moving with the tractor, for safety and preventing severe damage to the winch. [ ]

5) Purchaser advised how to activate pulling procedure with Green power cord and ensuring the clutch lever comes to rest tightly against stop to apply full pressure on the clutch discs. [ ]

6) Advise the purchaser not to put oil on the drive chain, but only a little bit of grease, occasionally, since clutch lining is 1"below the drive chain. [ ]

7) The support table under the top pulley must be greased and free of dirt and debris, so the top pulley will swivel easily and prevent additional wear to cable and top pulley [ ]

Dealer Signature _____, Purchaser Signature _____

Printed Name _____, Printed Name _____

Dealership Name _____,

Street Address _____, Street Address _____

Town, State, Zip _____, Town, State, Zip _____

Date: _____

Note: (Dealer, please keep copy and return original to Distributor to activate the Winch warranty within 30 days of the sale)

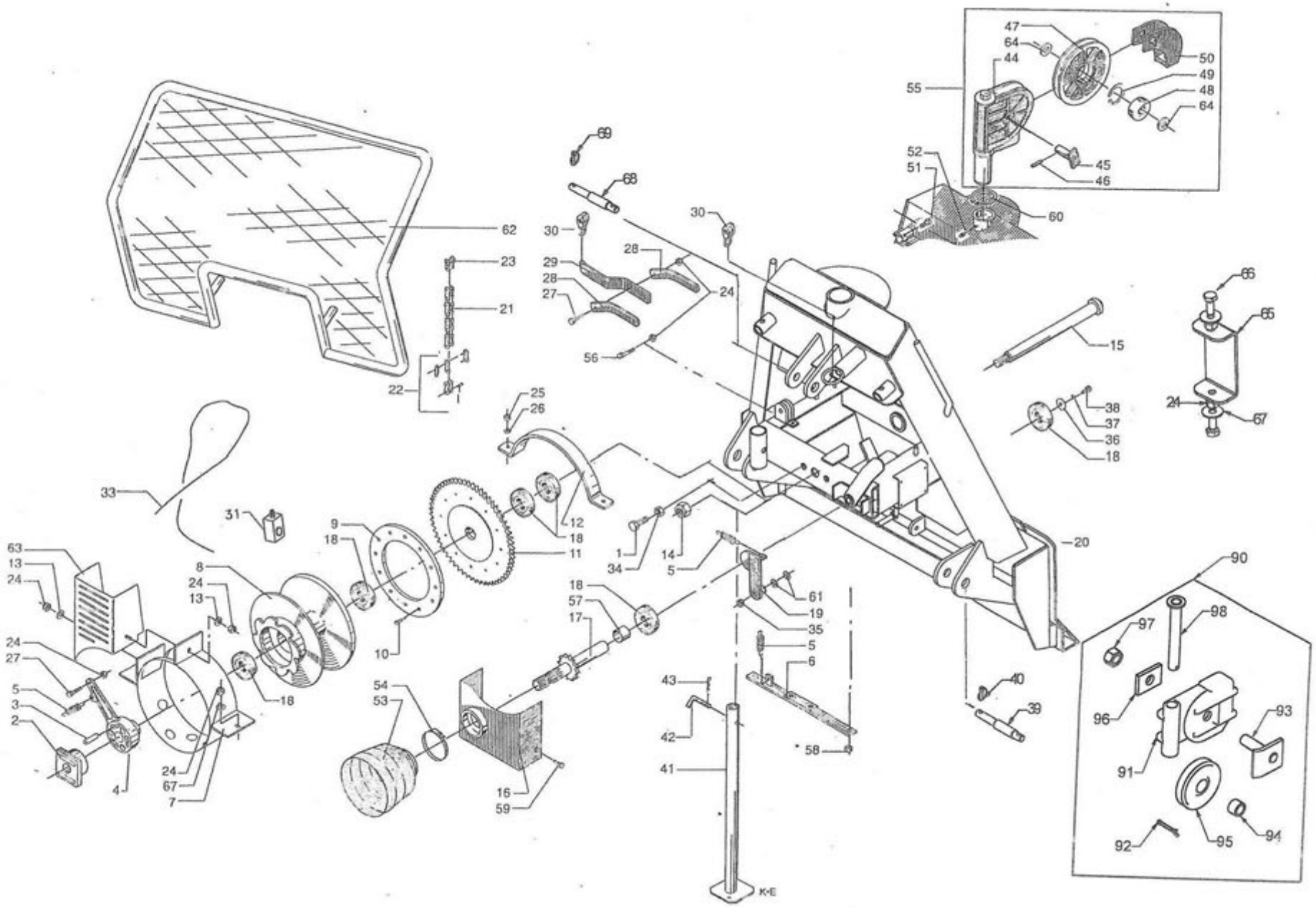

47
64
44
50
49
48
64
55
52
51
45
46
60
69
68
30
30
62
23
28
29
28
27
24
21
56
22
25
26
15
66
65
38
37
36
18
24
67
33
31
9
18
12
18
11
1
34
14
5
20
63
13
24
8
24
13
18
57
17
61
19
35
5
6
90
97
98
24
27
10
5
3
2
18
54
53
43
42
40
39
96
93
91
24
67
7
4
16
59
41
58
92
95
94
K-E

Nr. No.	Varenr. Part no.	Antal Quantity					Bemærkninger Remarks
Nr. No.	Teil Nr. No.de pièce	Anzahl Nombre	Beskrivelse	Desceiption	Bezeichnung	Designation	Bemerkung Remarques
1	740210560	2	Sætskrue	Set screw	Schraube	Vis	M16x50mm. FZB
2	15502	1	Kobling	Clutch	Kupplung	Embrayage	
3	15503	3	Nagle	Pin	Bolzen	Rivet	
4	15504	1	Koblingsarm	Clutch	Kupplung	Embrayage	
5	15539	2	Fjeder	Spring	Feder	Pression	
5	15541	1	Fjeder	Spring	Feder	Pression	
6	15205	1	Beslag	Bracket	Halter	Patte de fixation	
7	15207	1	Beskyttelsesramme	Protection frame	Schutzrahmen	Preotection de châssis	
8	15208	1	Wiretrommel	Wire roll	Drahttrommel	Roleau de fil metallique	
9	15209	1	Koblingsbelægning	Clutch lining	Kupplungsbelag	Garniture embrayage	
10	741170650	6	Kobbernitte	Copper pin	Kupfer Bolzen	Cheville	5x20mm.
11	15211	1	Kædehjul	Chain wheel	Kettenrad	Rue de chaîne	5/8" - 54Z
12	15212	1	Skærm	Cover	Deckel	Couvercle	
13	740600030	5	Skive	Disk	Scheibe	Bague	11x22x1,5mm. FZB
14	740400045	1	Låsemøtrik	Lock nut	Gegenmutter	Ecrou de freinage	1" UNC FZB
15	15215	1	Aksel	Driveshaft	Horizontalwelle	Arbre horizontal	
16	15216	1	Skærm	Cover	Deckel	Couvercle	
17	15217	1	Aksel med kædehjul	Driveshaft	Horizontalwelle	Arbre horizontal	5/8" - 13Z
18	1162072	6	Kugleleje	Ball bearing	Kugellager	Roulement à billes	6207 2RS
19	15219	1	Strammebeslag	Tightening-up fitting	Spannbeschlag	Garniture de tension	
20	15260	1	Hovedramme	Main frame	Hauptrahmen	Châssis principal	
21	15210	1	Kæde	Chain	Kette	Chaîne	5/8" RS50
22	1511120	1	Samleled, lige	Assembly joint	Sammelglied	Jointure d’ajustage	5/8" RS50
23	1512120	1	Samleled, forkrøbbet	Assembly joint	Sammelglied	Jointure d’ajustage	5/8" RS50
24	740420010	9	Låsemøtrik	Lock nut	Gegenmutter	Ecrou de freinage	M10 FZB
25	740320006	2	Møtrik	Nut	Mutter	Ecrou	M6 6KT FZB
26	740600015	2	Skive	Disk	Scheibe	Bague	6,5x13x1mm. FZB
27	740210320	2	Sætskrue	Set screw	Schraube	Vis	M10x35 FZB
28	15232	2	Beslag	Bracket	Halter	Patte de fixation	
29	15633	1	Beslag	Bracket	Halter	Patte de fixation	
30	15534	2	Trisserulle	Pulley roll	Rolle	Roleau de poulie	

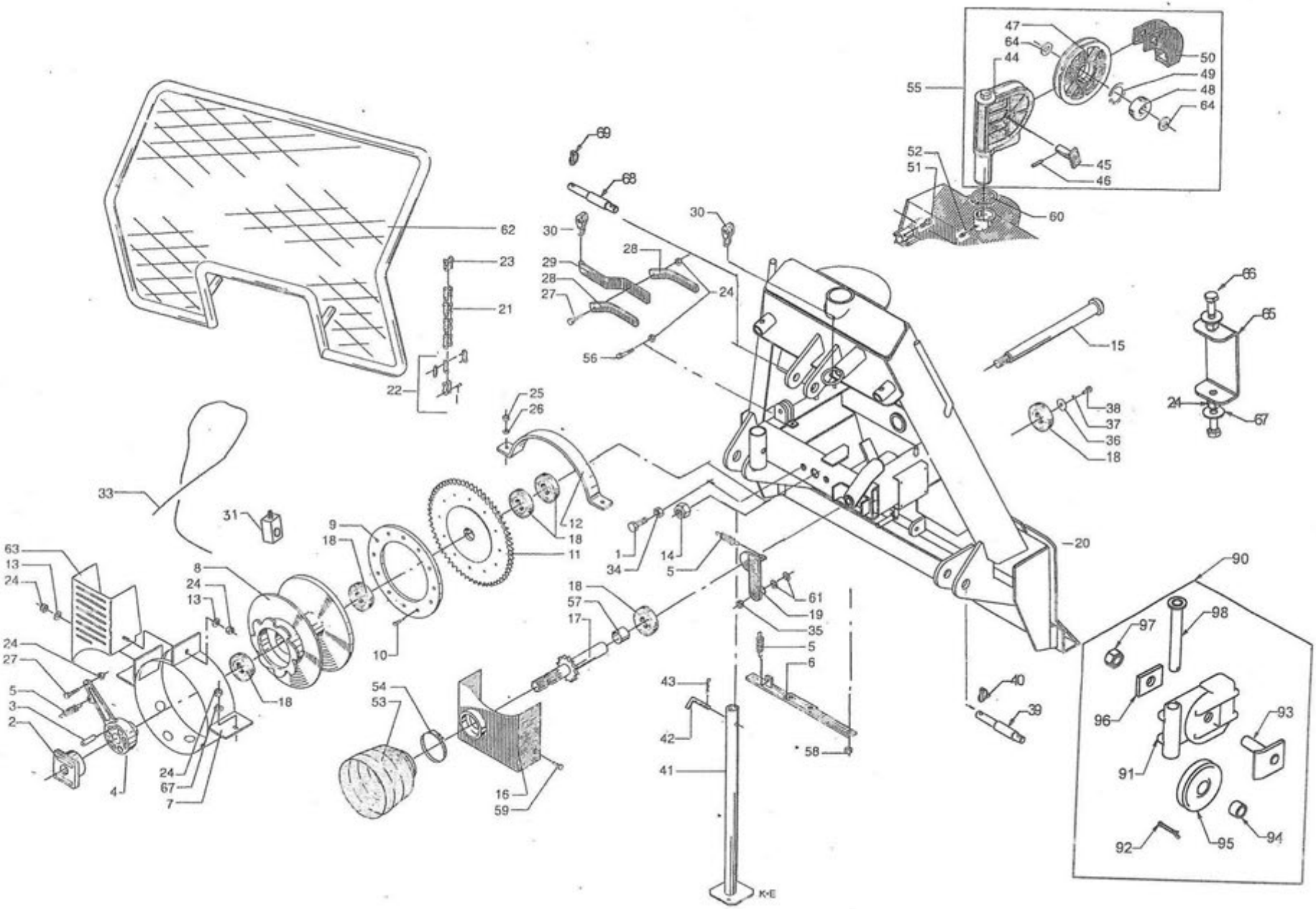

47
64
44
50
49
48
64
55
52
51
45
46
60
69
68
30
30
62
23
29
28
28
27
24
21
56
22
15
66
65
24
67
38
37
36
18
25
26
33
31
9
18
12
18
11
1
34
14
5
20
63
13
24
8
24
13
18
57
17
61
19
35
5
6
90
97
98
24
27
5
3
2
10
18
54
53
43
42
40
39
96
93
91
58
41
24
67
7
4
16
59
92
95
94
K-E

Nr. No. Nr. No.	Varenr. Part no. Teil Nr. No.de pièce	Antal Quantity Anzahl Nombre	Beskrivelse	Description	Bezeichnung	Designation	Bemærkninger Remarks Bemerkung Remarques
31	15587	1	Lås m.unbrakobolt	Locking wedge	Riegelkeil	Clavette de blocage	
33	15537	1	Nylonsnor	String	Draht	Cordon	8mm - 6mtr.
34	740320016	2	Møtrik	Nut	Mutter	Ecrou	M16 - 6KT FZB
35	740420012	1	Låsemøtrik	Lock nut	Gegenmutter	Ecrou de freinage	M12.
36	15518	1	Skive	Disk	Scheibe	Bague	
37	740750030	2	Centerfjederskive	Disk	Scheibe	Bague	10,2mm. FZB
38	740080142	1	Sætskrue (links)	Set screw (left hand)	Schraube (Links)	Boulun	M10x25 **links**
39	15536	2	Træktap	Hook	Haken	Crochet	
40	1210100	2	Traktorsplit	Cotter	Splint	Goupille	10 mm.
41	15661	1	Støtteben	Support leg	Stützbein	Support	
42	15558	1	Nagle	Pin	Bolzen	Rivet	
43	1220035	1	Hårnålesplit	Cotter	Splint	Goupille	
44	15629	1	Toprullebeslag	Top roll bracket	Gipfelrollehalter	Patte de fixation pour	
45	15628	1	Bolt	Bolt	Bolzen	Boulon	
46	741190225	2	Spændstift	Tension spring pin	Spannhülse	Goupille de blocage	8x50mm.
47	15529	1	Toprulle	Top roll	Gipfelrolle	Roleau de sommet	
48	1163042	1	Kugleleje	Ball bearing	Kugellager	Roulement à billes	6304 2RS
49	741142052	2	Låsering	Circlip	Seegerring	Circlip	52mm. Indv.
50	15630	1	Wirestyr	Wire control	Stahltrosse steuer	Câble d’acier patte de fixation	
51	740210390	2	Sætskrue	Set screw	Schraube	Vis	M12x16 FZB
52	881500240	1	Smørenippel	Grease nipple	Schmiernippel	Graisseur	M8x1,25
53	1418210	1	PTO-skærm	PTO-cover	PTO-Deckel	PTO-capot	
54	40257	1	Spændbånd	Clip band	Spannband	Collier de serrage	ABA 77-95mm.
55	15683	1	Toprulle, komplet	Rop roll, complete	Gipfelrolle, komplett	Roleau de sommet, cpl.	
56	740211325	1	Bolt	Bolt	Bolzen	Boulon	M10x40 FZB
57	15253	1	Afstandsbøsning	Distance sleeve	Abstandhalter	Douille entretoise	
58	740320010	3	Møtrik	Nut	Mutter	Ecrou	M10 - 6KT FZB
59	740210302	2	Sætskrue	Set screw	Schraube	Vis	M10x16mm. FZB
60	741141055	1	Låsering	Circlip	Seegerring	Circlip	55mm. udv.
61	740600038	2	Skive	Disk	Scheibe	Bague	14x30x2,0mm.
62	15875	1	Beskyttelsesramme	Protection frame	Schutzgitter	Châssis de protection	
63	15254	1	Skærm	Cover	Deckel	Couvercle	
64	15530	2	Skive	Disk	Scheibe	Bague	
65	15262	1	Skærm	Cover	Deckel	Couvercle	

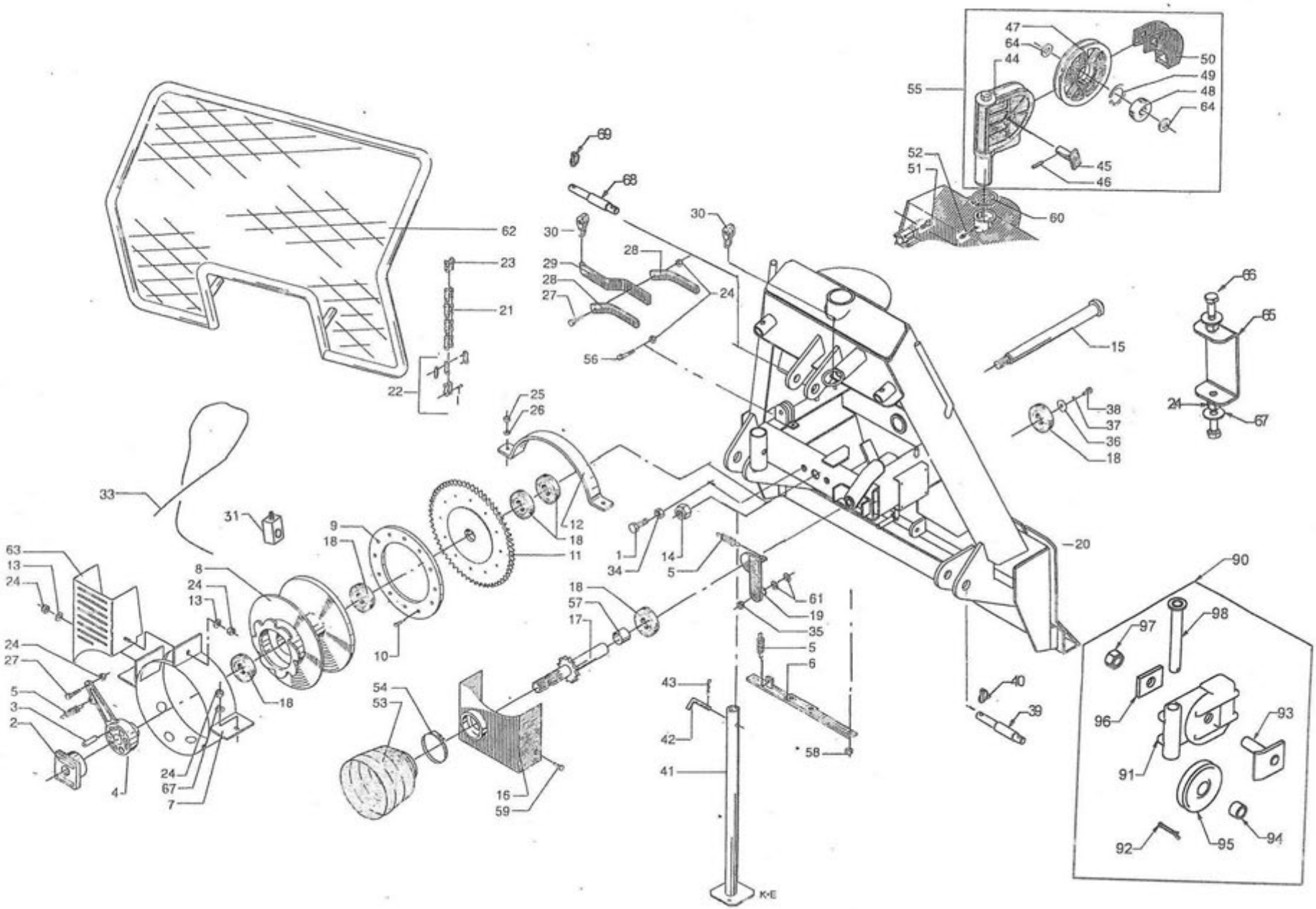

47
64
44
50
49
48
64
55
52
51
45
46
60
69
68
30
30
62
23
29
28
28
27
24
21
56
22
15
66
65
24
67
38
37
36
18
25
26
33
31
9
18
12
18
11
1
34
14
5
20
63
13
24
8
24
13
18
57
17
61
19
35
5
6
90
97
98
24
27
5
3
2
10
18
54
53
43
42
41
40
39
96
93
91
58
24
67
7
4
16
59
92
95
94
K-E

Nr. No. Nr. No.	Varenr. Part no. Teil Nr. No.de pièce	Antal Quantity Anzahl Nombre	Beskrivelse	Desceiption	Bezeichnung	Designation	Bemærkninger Remarks Bemerkung Remarques
66	740210310	2	Bolt	Bolt	Bolzen	Boulon	M10x25 FZB
67	113020	4	Skive	Disk	Scheibe	Bague	Ø11xØ30x2,0mm. FZB
68	18006	1	Topstangbolt	Bolt	Bolzen	Boulon	Kat.1-2
69	1210080	1	Traktorsplit	Cotter	Splint	Goupille	8,0 mm.

Tilbehør / Optional equipment / Zubehör / Equipment en option.

90	1593	1	Bundrulle komplet	Rolle Complete	Rolle komplett	Rolleau, cpl.	
91	15523	1	Beslag	Bracket	Halter	Patte de fixation	
92	741180225	1	Split	Pin	Splint	Goupille	5x40mm.
93	15543	1	Bolt	Bolt	Bolzen	Boulon	
94	15526	1	Broncebøsning	Bronce sleeve	Buchse	Douille	
95	15525	1	Wirerulle	Wireroll	Drath Rolle	Roleau	
96	15544	1	Beslag	Bracket	Halter	Patte de fixation	
97	740420020	1	Låsemøtrik	Lock nut	Gegenmutter	Ecrou de freinage	M 20.
98	15521	1	Bolt	Bolt	Bolzen	Boulon	

Fransgård