Important! ***Do Not Destroy!*** ***Please Read!***

Herd SURE-FEED BROADCASTER

Herd MODEL I-44, I-92

INSTRUCTIONS FOR
ASSEMBLY, MOUNTING, BROADCASTING,
OPERATING AND MAINTENANCE

REPAIR
PARTS LIST

The Herd Model I-92 Broadcaster is designed to be mounted to farm tractors, pickup trucks and the Herd #300 flotation trailer. We do not recommend that this broadcaster be mounted to a lawn tractor, garden tractor or all terrain vehicle (ATV) due the size of the broadcaster. If you purchased this seeder to mount to a lawn tractor, garden tractor or all terrain vehicle (ATV), please contact your dealer or Herd Seeder Company. Any questions about the safe operation of this broadcaster should be directed to Herd Seeder Company by phone at 574-753-6311

FEMA

www.herdseeder.com
info@herdseeder.com

HERD SEEDER COMPANY, INC.
P.O. BOX 448
2383 SOUTH US 35
LOGANSPORT, INDIANA 46947
574-753-6311
FAX 574-722-4106

Herd

MODEL I-44, I-92

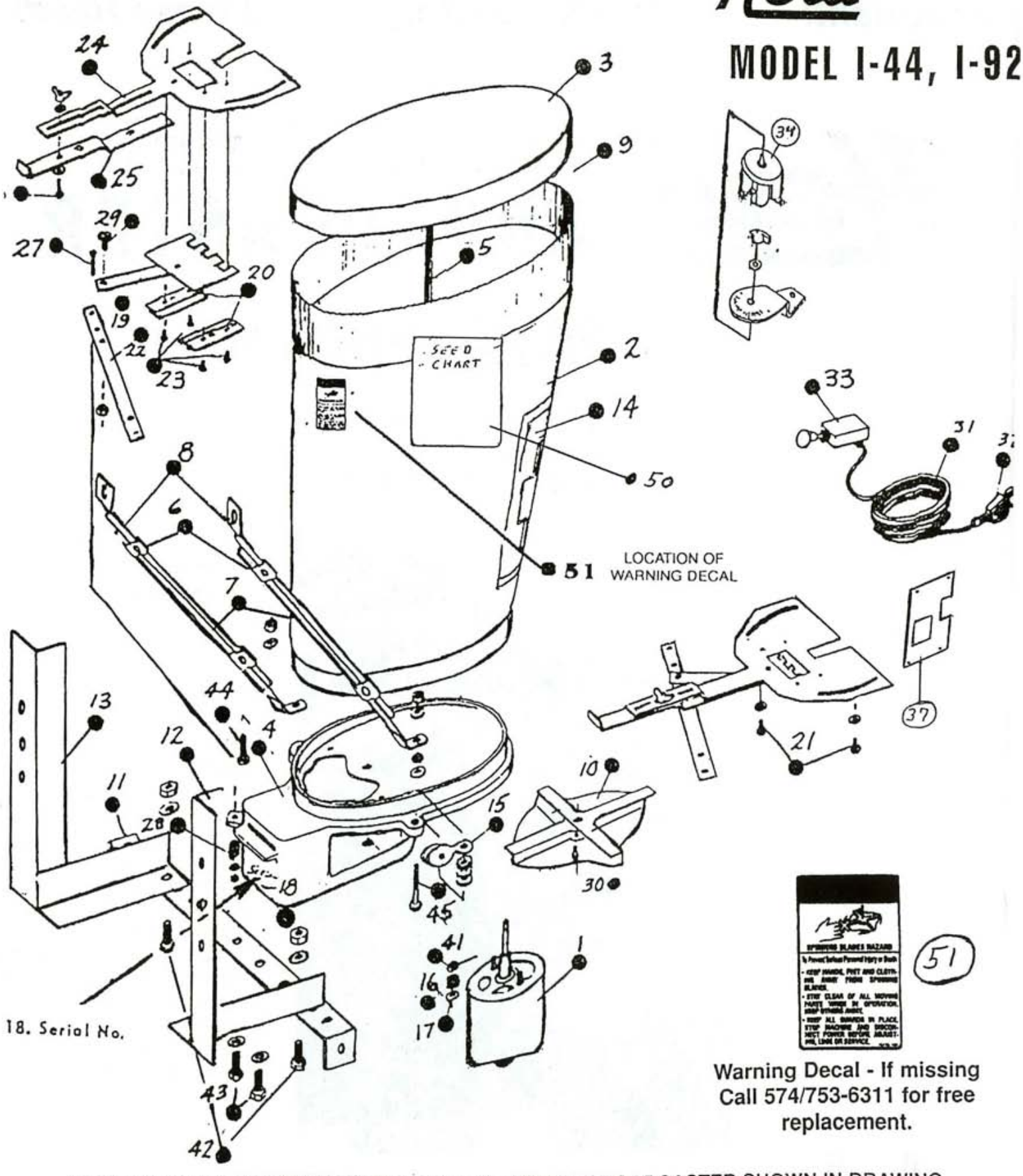

Warning Decal - If missing Call 574/753-6311 for free replacement.

PARTS AND ACCESSORIES FOR MODEL I-44 AND I-92 BROADCASTER SHOWN IN DRAWING.

"CAUTION" Disconnect power supply before making any adjustments or repairs to seeder. Keep hands, fingers and loose clothing well away from any and all moving parts at all times.

WHEN ORDERING PARTS, ORDER BY BOTH PART NAME AND NUMBER. ALSO, BE SURE TO GIVE MODEL NUMBER OF YOU BROADCASTER, AND SERIAL NUMBER. SERIAL NUMBER WILL BE FOUND ON GREY IRON BASE...NO. 18 IN DRAWING.

Drawing Number	Part Number	Part Description	Number Required
1.	712	12 Volt D.C. Motor (New Style 4" in Diameter)	
	600	Old Style 12 volt DC. Motor (3-1/4" In diameter)	
	724	Special order 24 Volt D.C. Motor (New Style 4" in Diameter)	
	624	Special order Old Style 24 volt D.C. Motor (3-1/4" in diameter)	
2	981C	Hopper For I-92 Seeder (2-7/8 Bushels capacity) Includes # 989B Seed Chart & all Decals	1
	771	Hopper For I-44 Seeder (1-3/8 Bushels capacity) Includes #989B Seed Chart & all Decals	
3.	796	Lid for Hopper of I-92 Seeder (# 912 Hopper Lid for I-44)	1
4.	599	Grey-Iron Base For I-92 and I-44	
5.	797	Lid Spring W/ 3/16" x 1/2" Bolt, Washer & Nut	1
6	924	Brace Rod Clamps	2
7.	934	Brace Rod - 5/16" Hole in End	2
8.	936	Brace Rod - 5/8" Hole in End	2
10.	986	Fan W/ 5/16" Bore (Included 2 - No. 502 Socket Set Screws)	1
11.	767	Straight Angle With Plates Welded on Ends	1
12.	768	Right "L-Arm" Fro Front or Rear Mounting	1
13.	769	Left "L-Arm" For Front or Rear Mounting	1
14.	831	Herd Sure-Feed Broadcaster Decal	1
	877	Model # Decal - Model I-44 Seeder	1
	878	Model # Decal - Model I-92 Seeder	1
15.	756	Pulley for Remote Control	1
16.	757	Spring, Stainless Steel - Used under Agitator to Hold Washer	1
17.	558	Steel Washer - Used On Fan Shaft, Under #757 Spring	1
18.		Location Of Serial Number	
19.	504	Seed Gate With Connecting Linkage (Stainless Steel)	1
20.	509	Guide For Seed Gate (1 Set consists of 2) Stainless Steel	2 Sets
21.	516	Cap screw - 1/4" x 1/2" W/Flat Washer Stainless Steel	2
22.	792	Control Handle	1
23.	510	Round Head Maching Screw - 3/16" x 3/8" Stainless Steel	4
24.	802SI	Pivot Plate (Stainless Steel) With Gauge Markings	1
25.	803S	Opening Gauge (Stainless Steel) Used on 802SI Pivot Plate	1
26.	804	Hex Head Cap screw - 1/2" x 1/2" With Nut and Washer	1
27.	806	Machine Screw 3/16" x 1- 3/4" With Nut and Washer	1
28.	807	Compression Spring - Use on Handle	1
29.	505	Pan Head Machine Screw - 1/4" x 1/2" with Jam Nut	1
30.	502	Socket Set Screw (St. St.) - 1/4" x 3/8" Use in 986 Fan	2
31.	754	Electric Wire - 14 Gauge - 12 Ft.	1
32.	755	Heavy Duty Clamp	1
33.	794	Switch, Push-Pull, To Turn Motor On & Off	1
34.	813	Rheostat, Complete W/Bracket & Knob (OPTIONAL) Used To Slow Spinner Fan, For Narrow Spreading	1
37.	517	BLOCKING PLATE - USED IN 808 & 808A KITS (OPTIONAL)	1
41.	559	Agitator With 5/16" Bore	1
42.	410	Hex Head Bolt - 1/2" x 1" with Nut & Lock washer	2
43.	410A	Hex Head Bolt - 1/2" x 1" With Lock washer	2
44.	407	Hex Head Bolt - 5/16" x 1" With Nut & Lock Washer	1
45.	422	Hex Head Bolt - 5/16" x 1-3/4" With Nut	1
50.	989B	Seed Chart Decal for Hopper	1
51.	1091	"Warning" Decal	1
	789	Small Carton Of Parts Shipped With Farm - Type I-92 & I-44 Contains The Following: 1 ea. - 794, 754, 755 & 407 and 2 of 924 Instruction & Parts List Book	1

Design subject to change without notice.

MODEL I-92 AND I-44 GENERAL INFORMATION:

1. FOR NORMAL BROADCASTING OF SEEDS AND FERTILIZER, THIS MODEL I-92 OR I-44 SEEDER REQUIRES NO CHANGES FOR IT WAS ASSEMBLED AT THE FACTORY FOR THIS PURPOSE.

2. MODEL I-92 OR I-44 SEEDER MAY BE MOUNTED ON EITHER THE FRONT OR REAR OF A TRACTOR, OR IN A 2" RECEIVER HITCH OF A PICK UP TRUCK. OPTIONAL #660 2" RECEIVER HITCH AVAILABLE.

3. A RHEOSTAT (PART #813) MAY BE PURCHASED AS AN OPTION TO CONTROL THE WIDTH OF THE SPREAD OF THE MATERIAL. THIS WILL ALLOW THE SPREAD PATTERN TO BE NARROWED BY A SLOWER FAN SPEED.

4. TO CENTER THE SPREAD PATTERN, PIVOT PLATE #802SI CAN BE MOVED TO LEFT OR RIGHT. TO DO THIS LOOSEN THE TWO CAP SCREWS HOLDING THE PIVOT PLATE TO THE BASE OF THE SEEDER. THE LETTER "C" IS A GOOD STARTING PLACE TO CENTER THE SPREAD OF MOST SEED SUCH AS CLOVER. WHILE FACING THE HOPPER AND LOOKING AT THE HERD SEEDER CO. DECAL, IF THE SPREAD PATTERN OF THE MATERIAL BEING SPREAD IS HEAVY TO YOUR RIGHT THEN MOVE THE PIVOT PLATE TO A LOWER LETTER, IF THE SPREAD PATTERN OF THE MATERIAL IS HEAVY TO THE LEFT MOVE THE PIVOT PLATE TO A HIGHER LETTER.

5. BE SURE BATTERY CHARGE IS UP AND GENERATOR OR ALTERNATOR IS OPERATING EFFICIENTLY SO THAT THE BROADCASTER WILL OPERATE AT NECESSARY RPM'S. THE MOTOR WILL USE APPROXIMATELY 8 TO 10 AMPS WHEN SPREADING SEEDS OR FERTILIZER.

6. IF THE UNIT IS USED FOR SPREADING FERTILIZER OR SALT, (WHICH WE DO NOT RECOMMEND) CARE MUST BE USED TO TRY AND KEEP CORROSIVE MATERIAL OUT OF THE MOTOR. USE COMPRESSED AIR AND BLOW ANY SALT OR FERTILIZER DUST OFF OF THE SEEDER. THEN WIPE ANY REMAINING RESIDUE OFF OF THE SEEDER WITH A CLEAN RAG.

7. FOR ORCHARD USERS THAT HAVE PURCHASED A STANDARD FRONT-MOUNTED I-44 OR I-92 AND WOULD LIKE TO SIDE MOUNT THE SEEDER FOR SPREADING HERBICIDES ON ROWS, A SIDE MOUNTING BRACKET (PART #826) IS AVAILABLE. THIS TOGETHER WITH A 808A WIDTH CONTROL KIT, THE 822 FRONT CHUTE KIT AND THE 827 SPOUT KIT MAKES A COMPLETE ORCHARD UNIT.

ASSEMBLY INSTRUCTIONS FOR MODEL I-44 AND I-92 SEEDERS

1. PLACE THE BROADCASTER, WITH MOTOR UP, ON LEVEL SURFACE FOR ASSEMBLY

2. TURN THE HANDLE PART #792 AROUND TOWARD SEEDER BASE AND REMOVE THE FLAT-HEAD SCREW AND JAM NUT. PLACE FLAT-HEAD SCREW FIRST THROUGH THE HOLE IN THE SEED GATE LINKAGE, THEN THROUGH THE HOLE IN THE HANDLE AND TIGHTEN WITH THE JAM NUT UNTIL SNUG. MAKE SURE THE JAM NUT IS UP, FACING YOU AND THAT IT IS NOT TOO TIGHT BECAUSE IT MUST PIVOT AT THIS POINT.

3. CHECK THE OPENING GAUGE CONTROL PLATE PART #803S FOR CORRECT FIT. IT IS POSSIBLE THE GAUGE COULD BE BENT IN SHIPPPING. THIS GAUGE IS USED TO SET THE SEED GATE OPENING WIDTH TO REGULATE THE AMOUNT OF SEED FLOWING THROUGH THE SEED GATE ON TO THE SPINNER FAN. THE SEEDER IS NOW READY TO BE MOUNTED TO THE TRACTOR OR TRUCK PER MOUNTING INSTRUCTIONS.

MOUNTING INSTRUCTIONS:

1. THE MODEL I-44 OR I-92 IS EQUIPPED WITH A COMBINATION MOUNTING BRACKET FOR FRONT OR REAR MOUNTING TO A FARM TRACTOR. THE BRACE RODS #936 AND #934 MUST BE USED WHEN THE SEEDER IS MOUNTED ON EITHER THE FRONT OR REAR OF A TRACTOR.

FOR FRONT MOUNTING: (SEE PHOTO ON THE FRONT OF THIS INSTRUCTION BOOK.)

1. WHEN FRONT MOUNTING THE BROADCASTER, IT SHOULD BE MOUNTED AS CLOSE TO THE GROUND AS POSSIBLE, JUST BE SURE THAT THE MOTOR CLEARS THE GROUND SUFFICIENTLY OR DAMAGE WILL OCCUR THAT WILL CAUSE COSTLY REPAIRS. IF THE BROADCASTER IS MOUNTED TOO HIGH, THE DRAFT FROM THE ENGINE FAN WILL CAUSE SEED AND FERTILIZER DUST TO BE SUCKED INTO THE RADIATOR AND CAUSE THE TRACTOR ENGINE TO HEAT UP.

2. BOLT THE "L-ARMS" TO THE FRONT OF THE TRACTOR WITH "L" DOWN AND THE SINGLE HOLE DOWN AND OUT FORWARD. THE THREE HOLES ON THE UPPER PART OF THE "L" CAN BE USED TO ADJUST THE HEIGHT OF THE UNIT FROM THE GROUND. NEXT TAKE THE ANGLE IRON WITH THE PLATES WELDED ON EACH END (PART #767) AND BOLT IT TO THE UNDERSIDE OF THE "L" ARMS. MAKE SURE THAT THE OPEN PART OF THE ANGLE IS TOWARDS THE TRACTOR THEN BOLT THE BROADCASTER TO THE TWO CENTER HOLES OF THE CROSS ANGLE (PART #767).

3. BE SURE TO BOLT THE BRACE RODS PART #936 TO A SOLID PLACE ON THE FRONT OF THE TRACTOR. SEE THE PHOTO ON THE FRONT OF THIS MANUAL FOR A PICTURE. BOLT THE REMAINING TWO BRACE RODS PART #934 TO THE SEEDER BASE PART #599 IN THE HOLES PROVIDED USING THE TWO 5/16" X 1" BOLTS AND NUTS.

4. FOR "REMOTE CONTROL" USE THE SMALL PULLEY BOLTED TO THE EAR OF THE BROADCASTER AND RUN A ROPE (NOT FURNISHED) THROUGH THIS PULLEY AND TIE IT TO THE HOLE IN THE CONTROL HANDLE PART #792. THE OTHER END OF THE ROPE SHOULD BE RAN BACK TO THE OPERATOR THEN BACK TO THE HANDLE AND TIED INTO THE HOLE AS WELL. THIS WILL MAKE A LOOP AND WILL ALLOW THE SEED GATE TO BE OPENED AND CLOSED BY PULLING ON ONE ROPE THEN THE OTHER.

REAR MOUNTING:

1. USING THE STRAIGHT ANGLE IRON WITH THE PLATES WELDED ON THE ENDS, (PART #767) AS A STAND FOR THE BROADCASTER, BOLT ONE END TO THE BASE OF THE BROADCASTER USING ONE OF THE 1/2" X 1" BOLTS PROVIDED. THEN BOLT THE OPPOSITE END OF THE STAND TO THE DRAW BAR OF THE TRACTOR AND ATTACH THE BRACE RODS FROM THE EARS OF THE SEEDER BASE TO THE FRAME OR FENDERS OF THE TRACTOR USING THE BRACE ROD CLAMPS #924 TO SECURE THE BRACE RODS.

MOUNTING #794 SWITCH OR 813 RHEOSTAT:

1. THE PUSH-PULL SWITCH OR THE DIAL RHEOSTAT CAN BE MOUNTED NEXT TO THE DRIVERS SEAT, AT A CONVENIENT PLACE. IT COULD ALSO BE MOUNTED NEXT TO THE BROADCASTER ON ONE OF THE REMAINING HOLES ON THE CROSS ANGLE IRON.

2. WHEN THE RHEOSTAT IS USED, DO NOT USE THE PUSH-PULL SWITCH IN LINE. THE RHEOSTAT HAS AN OFF POSITION AND WILL HAVE LONGER LIFE IF THE PUSH-PULL SWITCH IS NOT IN LINE WITH IT.

WIRING INSTRUCTIONS:

1. RUN THE #754 WIRE FROM THE MOTOR TERMINAL TO THE SWITCH OR RHEOSTAT, THEN RUN A WIRE FROM THE SWITCH OR RHEOSTAT TO THE POSITIVE (+) BATTERY TERMINAL. USE 14 GAUGE WIRE OR HEAVIER.

2. YOU CAN USE THE BATTERY CLAMP #755 TO CONNECT THE POSITIVE (+) WIRE FROM THE SWITCH OR RHEOSTAT TO THE POSITIVE (+) BATTERY TERMINAL FOR CONVENIENCE.

3. A SECOND GROUND WIRE IS NOT NECESSARY IF THE MOUNTING BRACKETS ARE IN GOOD CONTACT WITH THE TRACTOR OR TRUCK FRAME. HOWEVER, IF THE MOTOR WILL NOT OPERATE A SEPARATE "GROUND WIRE" MUST BE RUN BETWEEN THE FRAME OF THE SEEDER AND THE FRAME OF THE TRACTOR OR TRUCK, OR RUN DIRECTLY FROM THE SEEDER FRAME TO THE NEGATIVE (-) TERMINAL OF THE BATTERY.

ADDITIONAL TIPS AND TROUBLE-SHOOTING

1. CAUSES OF PACKING MATERIAL IN BOTTOM OF HOPPER:
   (A) FILLING UNIT AT BARN AND THEN DRIVING TO FIELD.
   (B) USING MATERIAL THAT HAS COLLECTED DAMPNESS FROM STORAGE, OR MATERIAL BEING USED ON EXTREMELY DAMP DAYS. (THIS MATERIAL ABSORBS MOISTURE VERY RAPIDLY.)
   (C) USE OF POOR GRADE MATERIAL.
   (D) USING HOPPER EXTENSION WHEN MATERIAL IS NOT USED AT A FAST RATE.

2. CAUSE OF MATERIAL BLOWING ON OPERATOR DURING SPREADING:
   (A) UNIT MOUNTED TOO HIGH ABOVE GROUND, WHEN MOUNTED TOO HIGH THE FAN DRAFT WILL PICK UP OBJECTIONAL ODORS OF THE INSECTICIDE OR HERBICIDE, AND ALSO DUST, AND CARRY THEM BACK TO THE OPERATOR.
   (B) USING MATERIAL THAT IS TOO DUSTY.
   (C) DRIVING INTO WIND. YOU SHOULD OPERATE VEHICLE AT A SLIGHT ANGLE SO THAT MATERIAL BLOWS TO ONE SIDE. DISK IN THIS DIRECTION TO COVER ALL MATERIAL.

3. HOPPER EXTENSION IS RECOMMENDED FOR SEEDS ONLY: WITH THE EXCEPTION THAT IT CAN BE USED WITH GRANULAR CHEMICALS WHEN YOU SPREAD LARGE AMOUNTS QUICKLY... FOR OTHERWISE IT MAY CAUSE PACKING OF MATERIAL IN BOTTOM OF HOPPER.

4. IF MOTOR DOES NOT OPERATE CORRECTLY, CHECK CONNECTION, BATTERY, GENERATOR, AND SWITCH, ALSO, MAKE SURE UNIT IS GROUNDED TO TRACTOR.

5. THE OPENING MUST BE OPENED WIDER FOR FASTER SPEEDS IN M.P.H. OF VEHICLE AND MUST BE SET NARROWER FOR SLOWER SPEEDS TO GET PROPER AMOUNT OF MATERIAL ON GROUND.

6. IF SPREAD IS TOO FAR TO THE LEFT WHEN FACING BROADCASTER, MOVE PIVOT PLATE SO THAT OPENING ALIGNS WITH A HIGHER LETTER. IF SPREAD CENTER IS TO THE RIGHT, MOVE PIVOT PLATE SO THAT OPENING ALIGNS WITH A LOWER LETTER. BE SURE TO TIGHTEN PIVOT PLATE CAPSCREWS AFTER ADJUSTING.

7. THE POORER THE GRADE OF GRANULAR CHEMICAL, THE NARROWER THE SPREAD AND MORE DIFFICULTIES WILL BE ENCOUNTERED. THEREFORE, WE RECOMMEND YOU USE GOOD, DUST-FREE MATERIAL.

MAINTENANCE:

1. WHEN THIS UNIT HAS BEEN USED FOR BROADCASTING ANY TYPE OF CORROSIVE MATERIAL SUCH AS FERTILIZER OR SALT, IT SHOULD BE THOROUGHLY CLEANED.

2. STORE THIS MODEL I-44 OR I-92 IN A DRY PLACE SO THAT MOTOR WILL NOT DRAW DAMPNESS, BE SURE TO CHECK MOTOR SO THAT IT RUNS FREELY WHEN IT IS TO BE USED AGAIN. RUN BROADCASTER EMPTY A FEW MINUTES BEFORE USING, AFTER LONG PERIODS OF STORAGE.

3. OIL WASHER IN HOPPER AT AGITATOR PIN.

4. THE MOTOR IS SEALED AND DOES NOT REQUIRE MAINTENANCE.

CHART FOR SPREADING GRANULAR CHEMICALS OF 8/16 GRANULES 808A (SEE CHART BELOW FOR 20/40 GRANULES

SIZE OPENING	M.P.H.	WIDTH OF SPREAD OR DISK WIDTH	USING 517 BLOCKING PLATE (1-808A)	NORMAL OPENING
5/16"	4	12 FT.	22 LB. 6 OZ.	44 LB. 12 OZ.
3/8"	4	12 FT.	33 LB.	66 LB.
5/16"	6	12 FT.	15 LB.	30 LB.
3/8"	6	12 FT.	21 LB. 10 OZ.	43 LB. 4 OZ.
5/16"	4	14 FT.	19 LB. 3 OZ.	38 LB. 6 OZ.
3/8"	4	14 FT.	28 LB. 3 OZ.	56 LB. 6 OZ.
5/16"	6	14 FT.	13 LB.	26 LB.
3/8"	6	14 FT.	19 LB.	38 LB.
5/16"	4	16 FT.	16 LB. 12 OZ.	33 LB. 8 OZ.
3/8"	4	16 FT.	24 LB. 10 OZ.	49 LB. 4 OZ.
5/16"	6	16 FT.	11 LB. 3 OZ.	22 LB. 6 OZ.
3/8"	6	16 FT.	16 LB. 7 OZ.	32 LB. 14 OZ.
5/16"	4	18 FT.	15 LB.	30 LB.
3/8"	4	18 FT.	22 LB.	44 LB.
5/16"	6	18 FT.	10 LB.	20 LB.
3/8"	6	18 FT.	14 LB. 9 OZ.	29 LB. 2 OZ.
5/16"	4	20 FT.	13 LB. 6 OZ.	26 LB. 12 OZ.
3/8"	4	20 FT.	20 LB.	40 LB.
5/16"	6	20 FT.	9 LB.	18 LB.
3/8"	6	20 FT.	13 LB.	26 LB.
5/16"	4	22 FT.	12 LB. 3 OZ.	23 LB. 6 OZ.
3/8"	4	22 FT.	18 LB.	36 LB.
5/16"	6	22 FT.	8 LB.	16 LB.
3/8"	6	22 FT.	12 LB.	24 LB.
5/16"	4	24 FT.	10 LB. 3 OZ.	20 LB. 6 OZ.
3/8"	4	24 FT.	16 LB. 6 OZ.	32 LB. 12 OZ.
5/16"	6	24 FT.	6 LB. 3 OZ.	12 LB. 6 OZ.
3/8"	6	24 FT.	10 LB. 9 OZ.	21 LB. 2 OZ.

NOTICE: WHEN SPREADING THIS SIZE MATERIAL, THE CENTER THREE (3) TEETH SHOULD BE CUT FROM FRONT EDGE OF SEED GATE #504.
ALL AMOUNTS ABOVE ARE GIVEN WITH TEETH REMOVED.

(USING THE 517 BLOCKING PLATE, A 5/16" OPENING WILL ALLOW 13 LBS. GRANULAR CHEMICAL TO RUN THROUGH OPENING EVERY 6 MINUTES, OR 2 LBS. 3 OZ. EVERY MINUTE.)

CHART FOR SPREADING GRANULAR CHEMICALS OF 20/40 GRANULES AND SMALLER - KIT 808 OR 808A (SEE CHART ABOVE FOR 8/16 GRANULES)

SIZE OPENING	M.P.H.	WIDTH OF SPREAD OR DISK WIDTH	USING 1-517 BLOCKING PLATE (1-808 KIT)	NORMAL OPENING
1/4"	4	12 FT.	15 LB.	30 LB.
1/4"	5	12 FT.	12 LB.	24 LB.
1/4"	6	12 FT.	10 LB.	20 LB.
1/4"	4	14 FT.	13 LB.	23 LB. 12 OZ.
1/4"	5	14 FT.	10 LB. 6 OZ.	20 LB. 12 OZ.
1/4"	6	14 FT.	8 LB. 12 OZ.	17 LB. 8 OZ.
1/4"	4	16 FT.	11 LB. 4 OZ.	22 LB. 8 OZ.
1/4"	6	16 FT.	7 LB. 8 OZ.	15 LB.
1/4"	4	18 FT.	10 LB.	20 LB.
1/4"	5	18 FT.	8 LB.	16 LB.
1/4"	6	18 FT.	6 LB. 10 OZ.	13 LB. 4 OZ.
1/4"	4	20 FT.	9 LB.	18 LB.
1/4"	5	20 FT.	7 LB. 8 OZ.	15 LB.
1/4"	6	20 FT.	6 LB.	12 LB.
1/4"	4	22 FT.	8 LB. 4 OZ.	16 LB. 8 OZ.
1/4"	5	22 FT.	6 LB. 8 OZ.	13 LB.
1/4"	6	22 FT.	5 LB. 8 OZ.	11 LB.

FOLLOW DIRECTIONS ON SACK FOR RECOMMENDED APPLICATION AMOUNTS.
BE SAFE. DO NOT TAKE CHANCES. CHEMICALS ARE TOXIC.

CHART FOR BROADCASTING SEEDS AND FERTILIZER - MODELS I-44 AND I-92
FIGURED AT 4 M.P.H. AND ON 12 VOLT SYSTEM

SEED OR MATERIAL	SIZE OPENING	SOWS PER ACRE	WIDTH
ALFALFA	3/16"	5-1/2 LBS.	28 FT.
AMMONIUM NITRATE	3/8"	80 LBS.	24 FT.
AUSTRALIAN PEA	3/8"	1 BU.	34 FT.
BAHIA GRASS (SEE BELOW)	3/16"	19 LBS.	18 FT.
BLUE GRASS	1/2"	2/3 BU.	14 FT.
BROME GRASS	1/2"	5/6" BU.	28 FT.
CLOVER	3/16"	5-1/2 LBS.	28 FT.
FERTILIZER, PELLET OR GRANULAR	5/8"	62 LBS.	24 FT.
FLAX AND MILLET	1/4"	10 PTS.	30 FT.
LADINO CLOVER	1/32"	1 LB.	28 FT.
LESPEDEZA	3/16"	6 LBS.	28 FT.
OATS	1"	2 BU.	26 FT.
ORCHARD GRASS	3/8"	2/3 BU.	18 FT.
RED TOP	3/16"	7 PTS.	18 FT.
RYE	1/2"	3/4 BU.	32 FT.
RYE GRASS	3/8"	1 BU.	21 FT.
SWEET SUDAN GRASS	1/2"	20 LBS.	28 FT.
TIMOTHY	3/16"	6 LBS.	26 FT.
TURNIP SEED	1/4"	10 LBS.	36 FT.
VETCH	3/8"	2/3 BU.	36 FT.
WHEAT	1/2"	3/4 BU.	32 FT.

(1 BU. OF ALFALFA, CLOVER AND SWEET CLOVER WEIGHT APPROXIMATELY 60 LBS.)
(1 BU. OF BLUE GRASS, BROMEGRASS AND ORCHARD GRASS WEIGHT APPROXIMATELY 14 LBS.)
(8PTS. OF ALFALFA AND CLOVER WEIGHT APPROXIMATELY 7-1/2 LBS.)

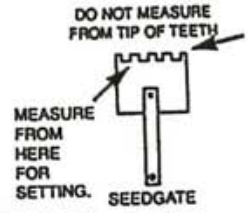

(1 LB. = .045 KG
(8 lbs. = 3.6 KG
(14 LBS. = 6.3 KG

1 MILE = 1.6 KM
4 MILE = 6.4 KM
6 MILE = 9.6 KM

1 FOOT = 30 CM)
12 FEET = 3.6 M)
18 FEET = 5.4M)

WIDTH OF SPREAD VARIES ACCORDING TO QUALITY AND WEIGHT OF SEED OR MATERIAL FAN SPEED AND WIND CONDITIONS. ALL WIDTHS GIVEN ABOVE ARE CONSERVATIVE, AFTER MAKING ONE RUN THROUGH FIELD, CHECK SPREAD, AND ALSO, CHECK BATTERY CONNECTIONS.

***CAUTION:** WHEN SPREADING BAHIA GRASS TEETH MUST BE REMOVED FORM SEED GATE FOR EVEN FEEDING. FOR EVERY 1/16" INCREASE IN OPENING, THE AMOUNT GOING THROUGH OPENING WILL INCREASE APPROXIMATELY 100% OVER LAST SETTING.

LIMITED WARRANTY

This Herd Broadcaster was throughly tested before it left the factory. We warrant each Broadcaster sold by us to be free from defects in material and workmanship when used according to our directions. Our obligation under this warranty is limited to making good at the factory any defective part or parts thereof which shall, within three months after delivery of such Herd Broadcaster to the original purchaser, to be returned to us. No person or company is authorized to make further warranty.

This warranty shall not apply to any Herd Broadcaster which shall have been repaired or altered outside of our factory in any way so as to affect it's stability or reliability, nor which has been subject to misues, negligence or accidents, or was caused by damage while in possession of the consumer or resulted from failure to the consumer to provide reasonable and necessary maintenance.

DAVID E. HERD, PRESIDENT
HERD SEEDER CO., INC. - P.O. BOX 448 - Logansport, IN 46947

*Excluding Motor - Motor warranty 30 days from date of purchase.

HERD SEEDER COMPANY, INC.
2383 South U.S. 35, P.O. Box 448
Logansport, Indiana 46947-0448
Phone: 574/753-6311
Fax: 574-722-4106